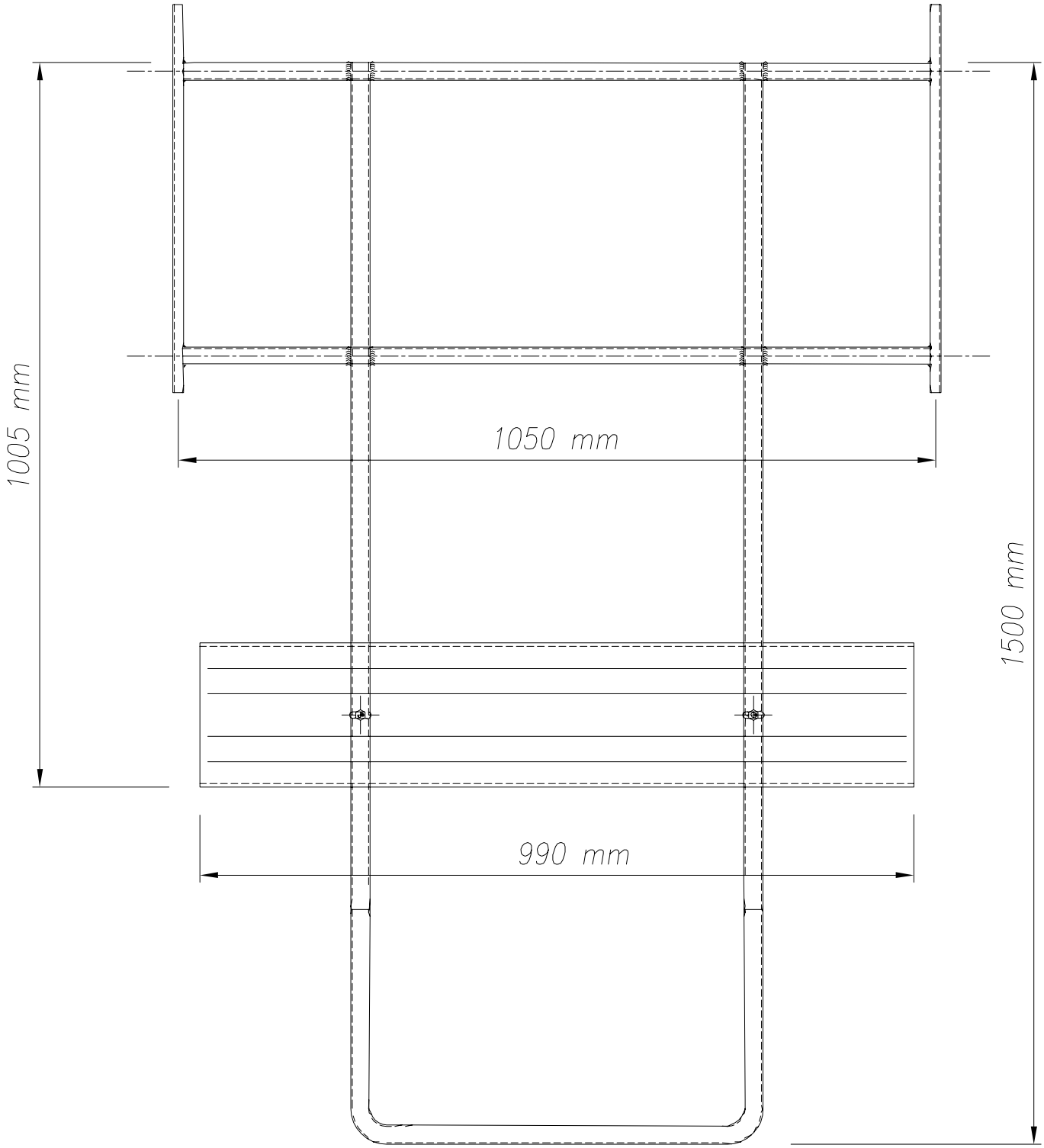
1005 mm
1050 mm
1500 mm
990 mm