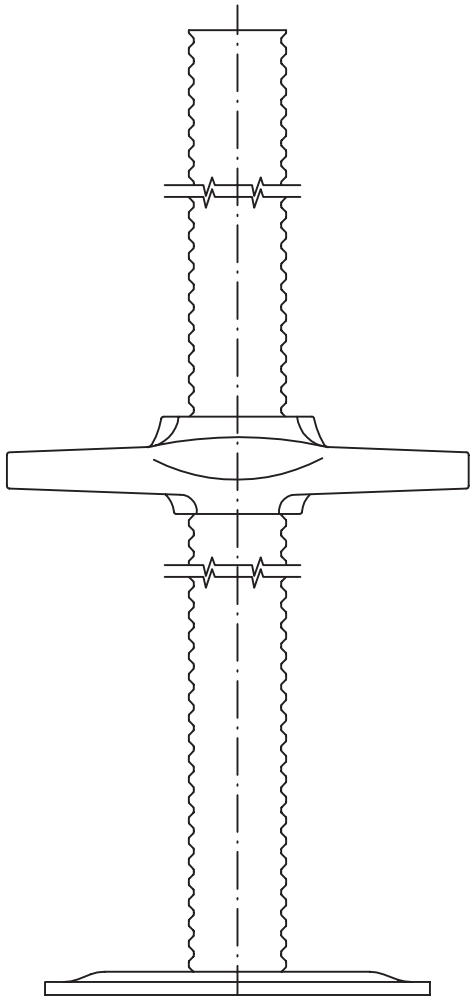

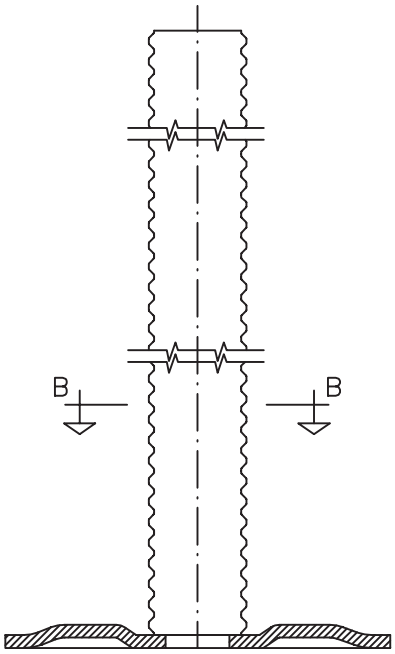
B
B

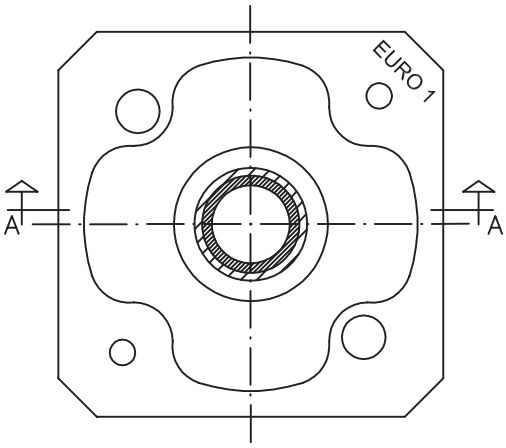
EURO 1
A
A